CRS09

Angular Rate Sensor

A new design of silicon MEMS gyro combined with high-quality discrete electronics, enabling best-in-class performance for demanding applications. Low noise and outstanding stability make this the sensor of choice for applications where a fibre-optic gyro would have been the preferred solution.

The CRS09 offers a new choice for users who have integrated the now-discontinued VSG into their products. Applications include closed-loop stabilisation, precision flight instrumentation (including high-performance AHRS) and other applications where low noise is a priority.

Temperature stability is excellent however, for the highest possible performance, both internal temperature and silicon ring frequency data are provided as additional outputs. These allow very accurate determination of the temperature characteristics of the sensor, such that a designer can apply his own temperature compensation scheme.

Whatever your application, the unique and patented silicon ring technology gives advanced and stable performance over time and temperature, overcoming mount sensitivity problems associated with simple beam or tuning fork based sensors.

Key Features

- Best-in-class performance
- Low noise
- High stability over temperature
- Provision for temperature compensation
- FOG-like performance
- Two rate ranges, two performance choices for each

© Silicon Sensing is an Atlantic Inertial Systems, Sumitomo Precision Products joint venture company

CRS09

Angular Rate Sensor

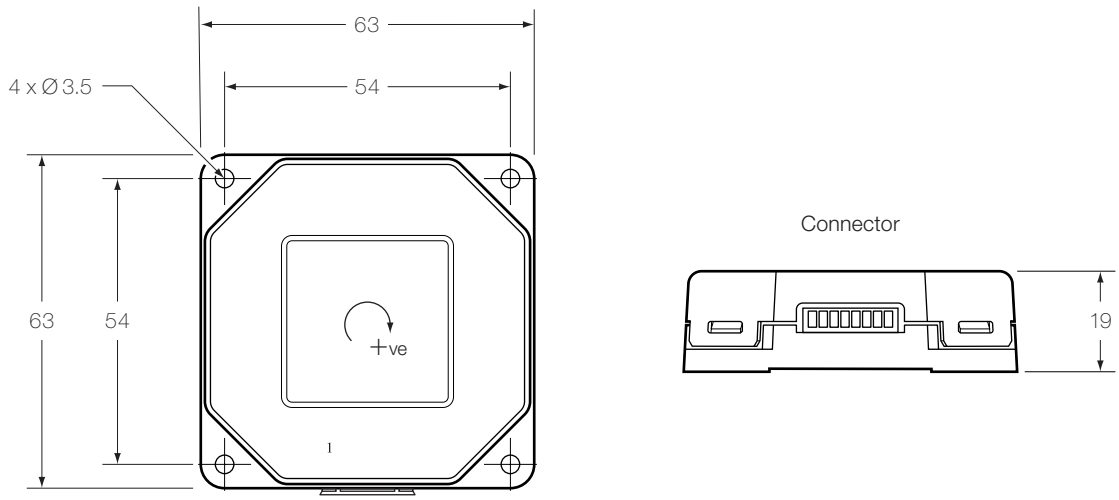

All measurements in millimetres.

Typical Data

	CRS09-01 CRS09-11	CRS09-02 CRS09-12
Angular Rate Range	±200°/s	±100°/s
Output	Analogue (non-ratiometric)	
Scale Factor		
Nominal	10mV/°/s	20mV/°/s
Setting tolerance (23°C)	±1%	
Variation over temperature range	< ±1%	
Nonlinearity	0.1% of full scale	
Bias		
Setting tolerance (23°C)	< ±1°/s	
Variation over temperature range	< ±3°/s (CRS09-01 and CRS09-02) < ±1°/s (CRS09-11 and CRS09-12)	
Angular Random Walk	0.1°/rt hr	
Bias instability	3°/hr	
Bandwidth (typical)	55Hz	
Quiescent Noise		
3 to 30Hz	0.03°/s rms	
Environment		
Temperature	−40°C to +85°C	
Linear acceleration	tba	
Shock	tba	
Vibration	10g rms (20Hz to 2kHz, random)	
Cross-axis sensitivity	2%	
Mass	60 grams	
Electrical		
Supply voltage	+4.75V to +5.25V	
Supply current	100mA (steady state)	
Noise and ripple	<15mV (0.5Hz to 100Hz)	
Start-up time	< 0.5s	
RoHS Compliant	Yes	

Pin Connections

1	GND
2	+5V
3	Rate Output
4	Reference
5	TMP
6	Do Not Connect
7	FRQ
8	Not Connected

Silicon Sensing Systems Limited
Clittaford Road Southway
Plymouth Devon
PL6 6DE United Kingdom

T: +44 (0)1752 723330
F: +44 (0)1752 723331
E: sales@siliconsensing.com
W: siliconsensing.com

Silicon Sensing Systems Japan Limited
1-10 Fuso-Cho
Amagasaki
Hyogo 6600891 Japan

T: +81 (0)6 6489 5868
F: +81 (0)6 6489 5919
E: sssj@spp.co.jp
W: siliconsensing.com

Specification subject to change without notice.

© Copyright 2008
Silicon Sensing Systems Limited
All rights reserved.

Printed in England 09/08

Silicon Sensing Systems Limited Registered in England & Wales No. 3635234 Clittaford Road, Southway, Plymouth, Devon PL6 6DE
The device mark Silicon Sensing is a registered trade mark of Silicon Sensing Systems Community Trade Mark 003587664

CRS09-00-0100-131 Rev 3
DCR No. 616268